11450 STEPHENS RD, WARREN MI 48089 800-682-7446 FAX:586-427-0076 WWW.TSSCWS.COM

SEQ5-1224- TSS LOW VOLTAGE SEQUINCING FLASHER UP TO 5 LOADS

DIP SWITCH SETTINGS

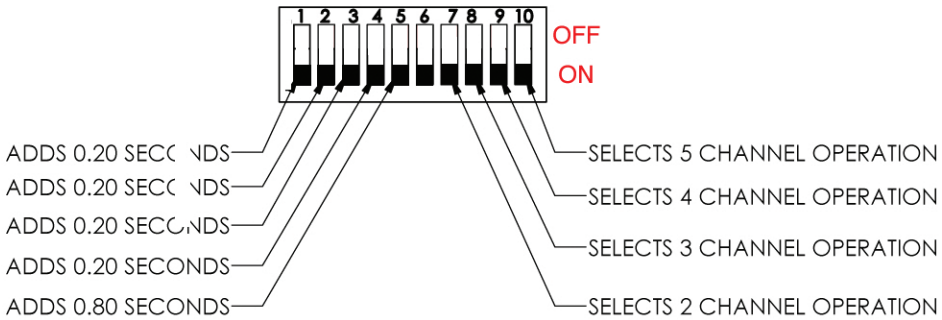

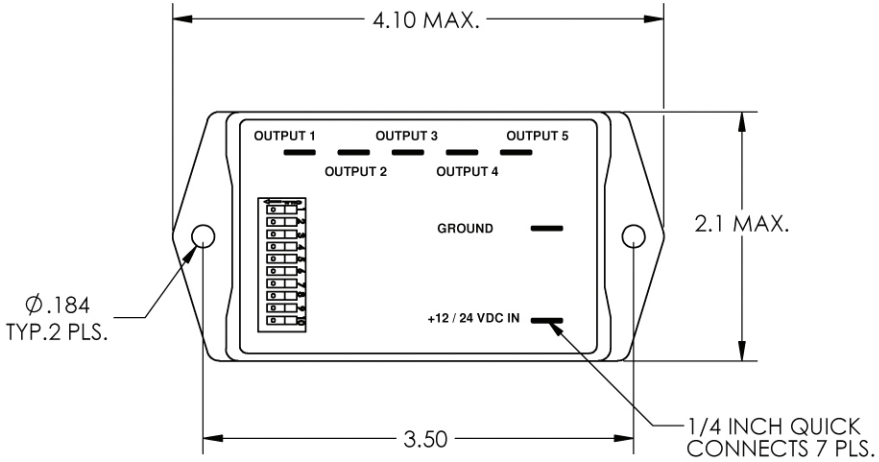

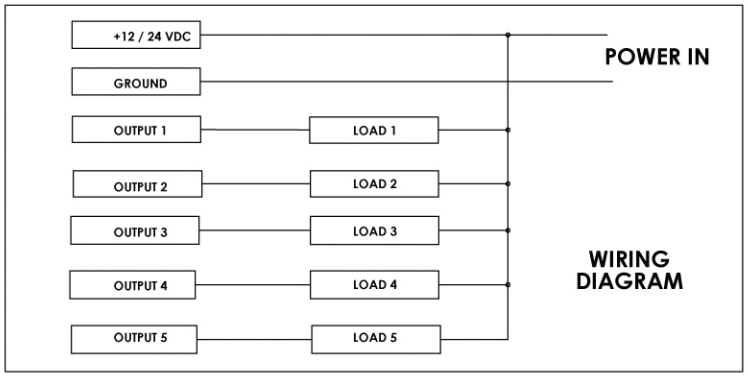

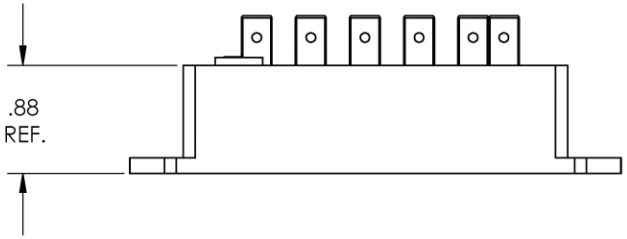

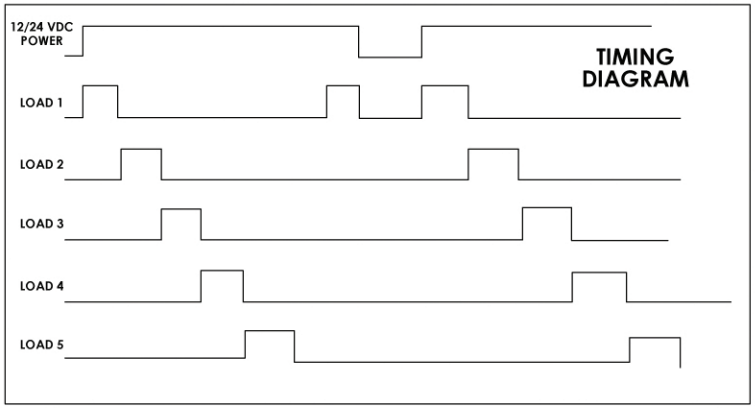

NOTES:

1) ONLY ONE CHANNEL SELECTION SWITCH SHOULD BE IN THE ON POSITION, WITH ALL THE SWITCHES IN THE OFF POSITION, THE UNIT IS DISABLED.

2) WITH ALL THE TIMING SWITCHES OFF, THE UNIT IS DISABLED

3) CYCLE TIMES WILL BE ADDED, FOR EXAMPLE, WITH SWITCHES 1 AND 3 IN THE ON POSITION, THE CYCLE TIME WOULD BE CALCULATED AS.... 0.20 + 0.20 = 0.40 SECONDS.

4) MAXIMUM LOAD CURRENT IS 3 AMPERES