INSTALL FOR SINGLE LED VACUUM LIGHT ASSEMBLY

11450 STEPHENS RD WARREN, MI 48089 800-682-7446 www.tsscws.com

STEP 1: MEASURE A (GOOD) SPOT FOR CLAMP #1. USE A TEK SCREW TO ATTACH CLAMP #1 TO THE VACUUM ARCH. (NOTE: IF STAINLESS STEEL, PILOT HOLES MUST BE PRE-DRILLED)

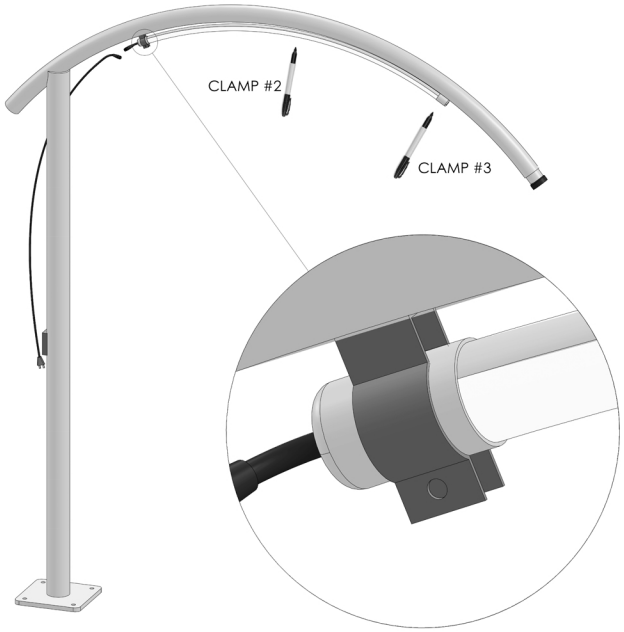

STEP 2: ATTACH THE WHITE END-CAP OF THE LED LIGHT TO CLAMP #1. MARK POSITIONS OF CLAMP #2 AND CLAMP #3 (MAKE SURE CLAMP #3 IS POSITIONED WHERE THE OTHER WHITE END-CAP IS LOCATED)

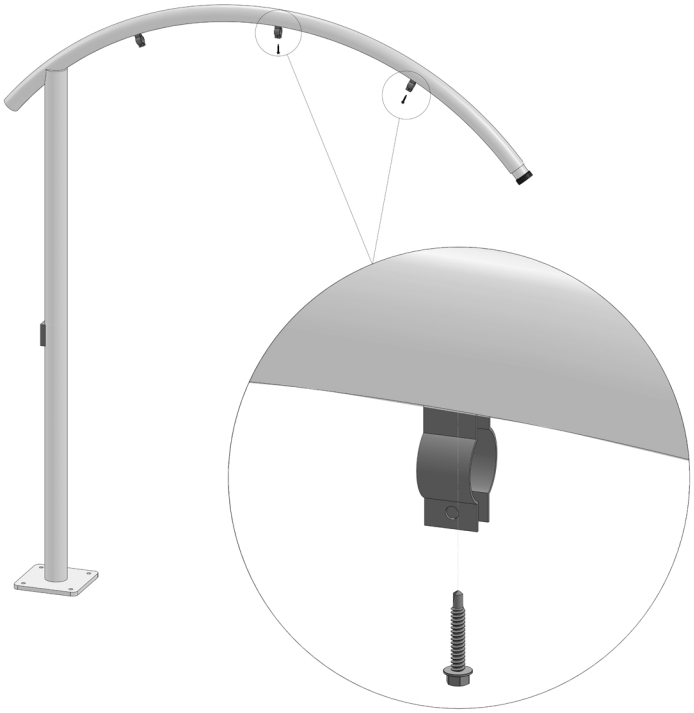

STEP 3: REMOVE THE LED LIGHT AND FIX CLAMP #2 AND CLAMP #3 IN PLACE WITH TEK SCREWS. (NOTE: IF STAINLESS STEEL, PILOT HOLES MUST BE PRE-DRILLED)

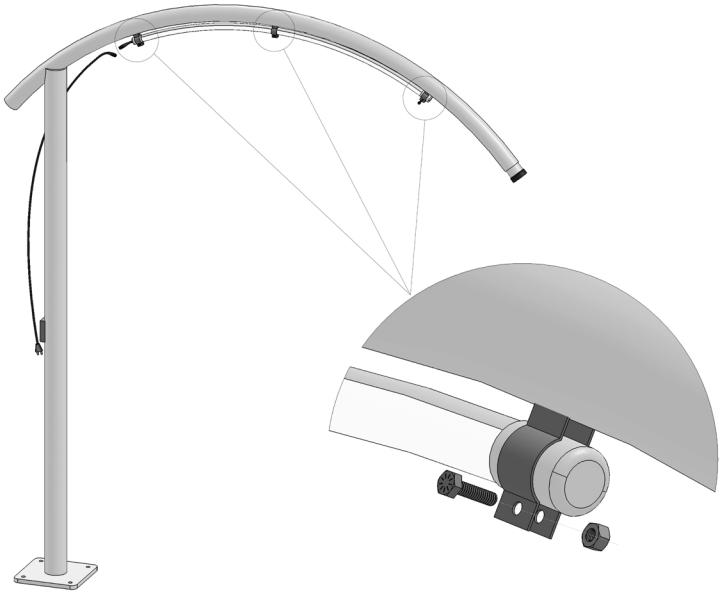

STEP 4: PLACE THE LED LIGHT TO THE CLAMPS AND FASTEN IT WITH PROVIDED NUTS AND BOLTS.

INSTALL FOR SINGLE LED VACUUM LIGHT ASSEMBLY

11450 STEPHENS RD WARREN, MI 48089 800-682-7446 www.tsscws.com

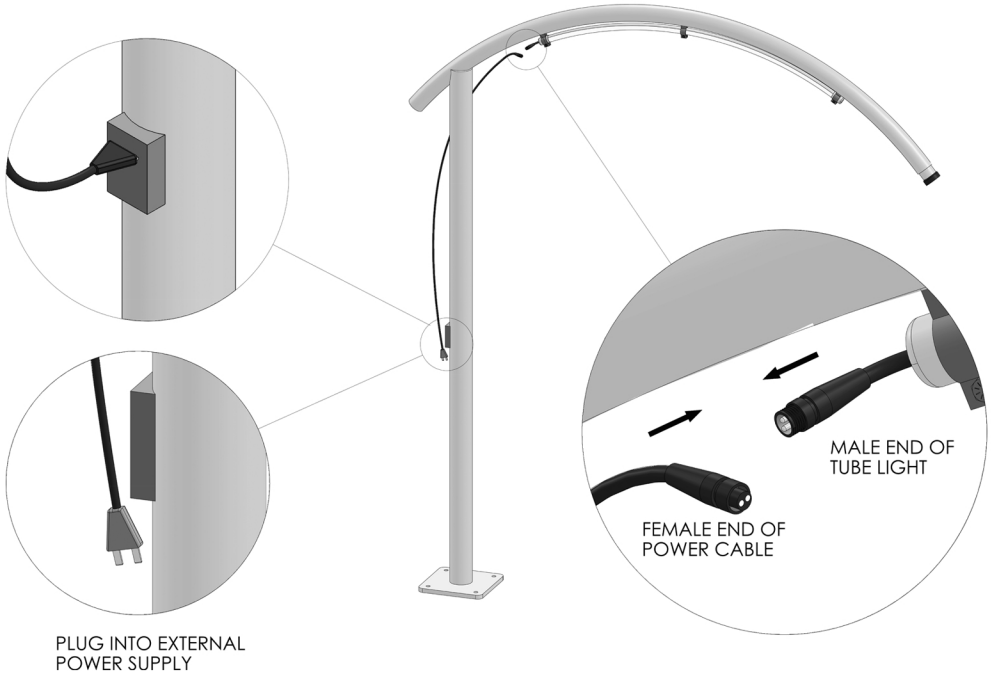

STEP 5: THREAD THE FEMALE END OF THE POWER CABLE INTO THE MALE END OF THE LED TUBE LIGHT