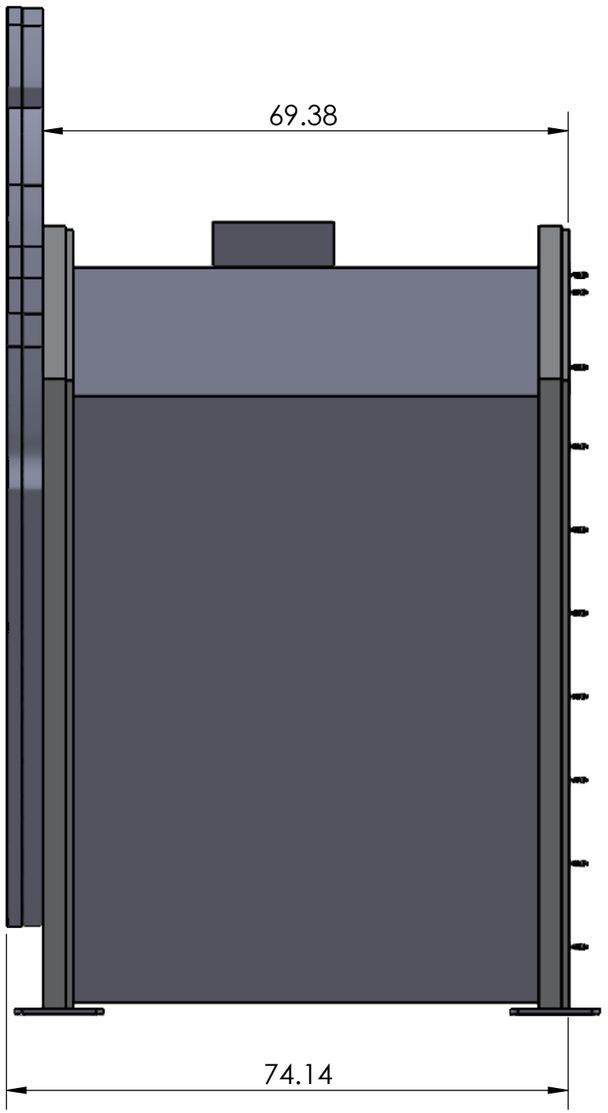

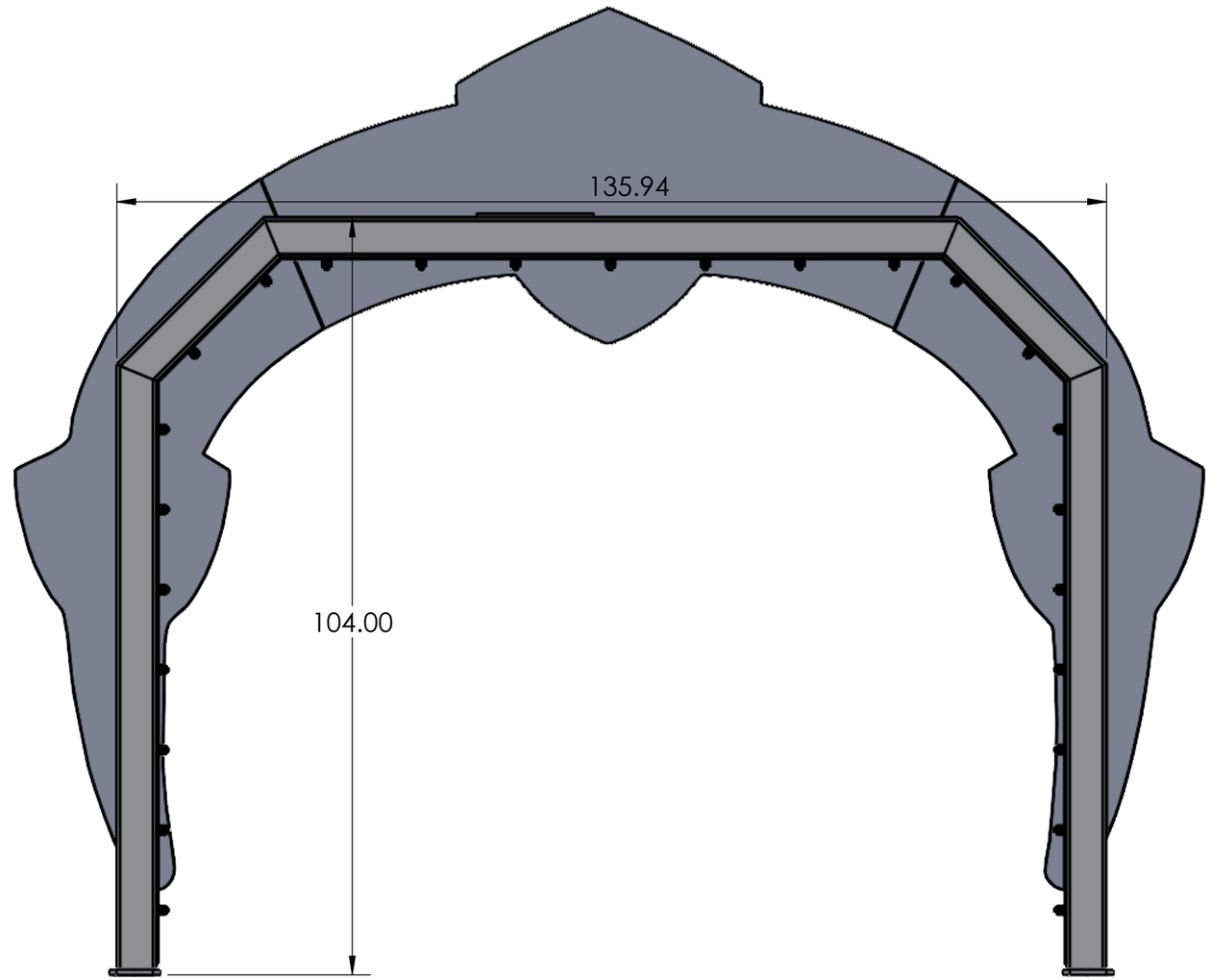

NCS

First Used On: FIRST MACHINE		
Checked: XX Date: XX/XX/XXXX	Part Name: **G&G LIGHT ARCH**	
Design: XX Date: XX/XX/XXXX	Part Number: IGARCH	Revision **X**
Weight (.lbs)	Material: **MATERIAL**	Sheet **1 of 2**

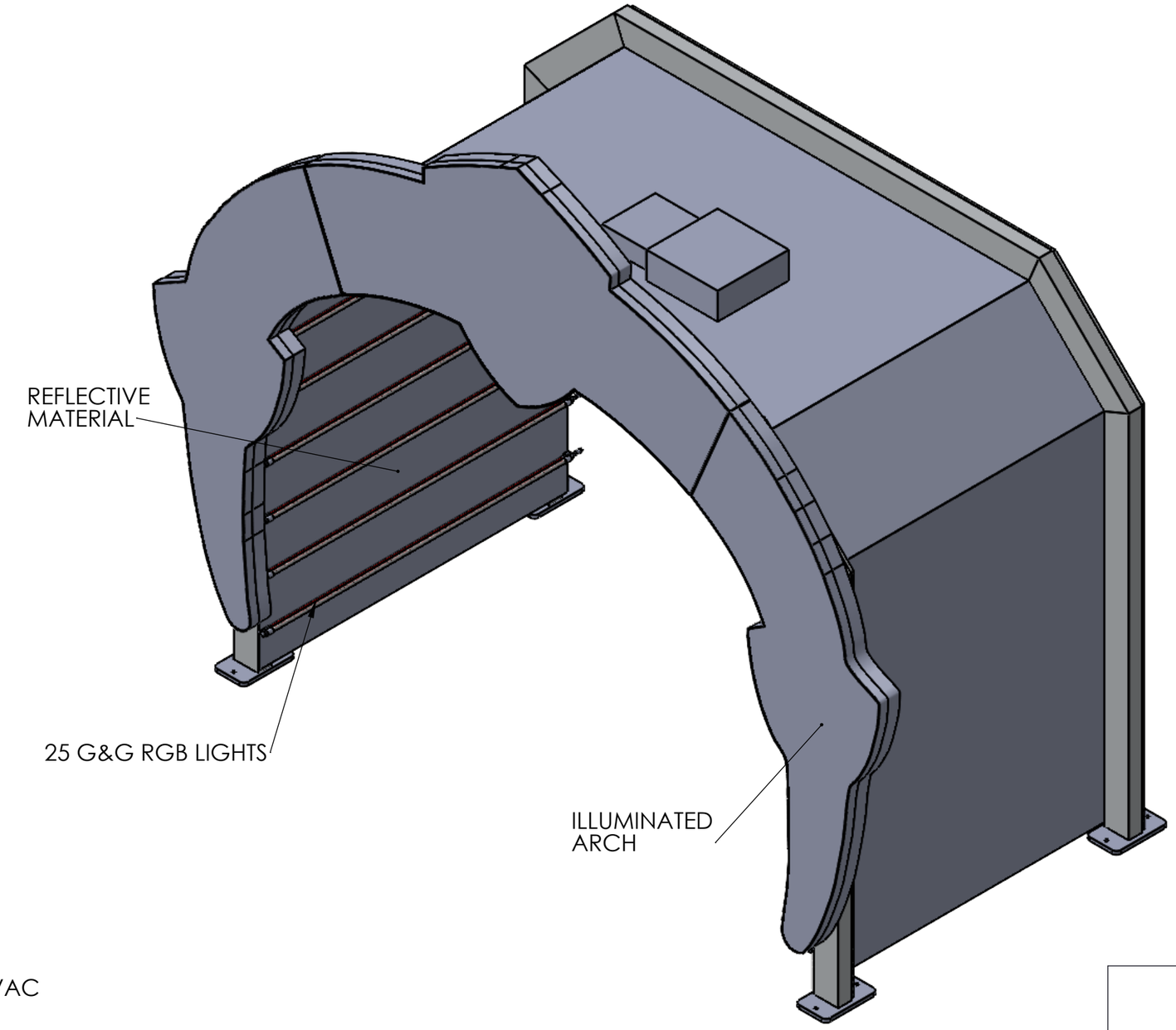

NOTE -

1. INPUT VOLTAGE 100-240VAC

NCS		
First Used On: FIRST MACHINE		
Checked: XX Date: XX/XX/XXXX	Part Name: **PART DESCRIPTION**	
Design: XX Date: XX/XX/XXXX	Part Number: IGARCH	Revision **X**
Weight (.lbs)	Material: **MATERIAL**	Sheet **2 of 2**